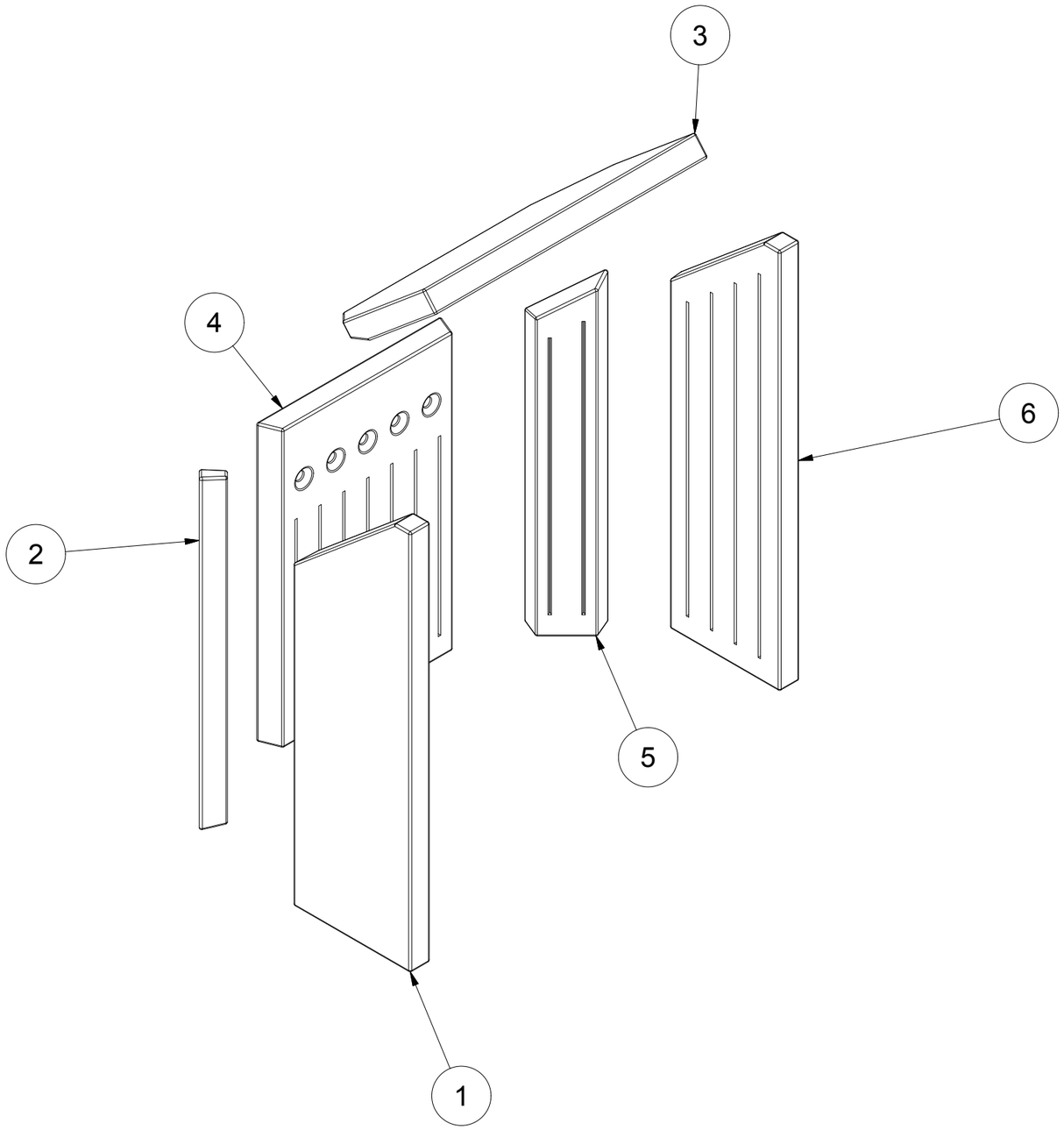

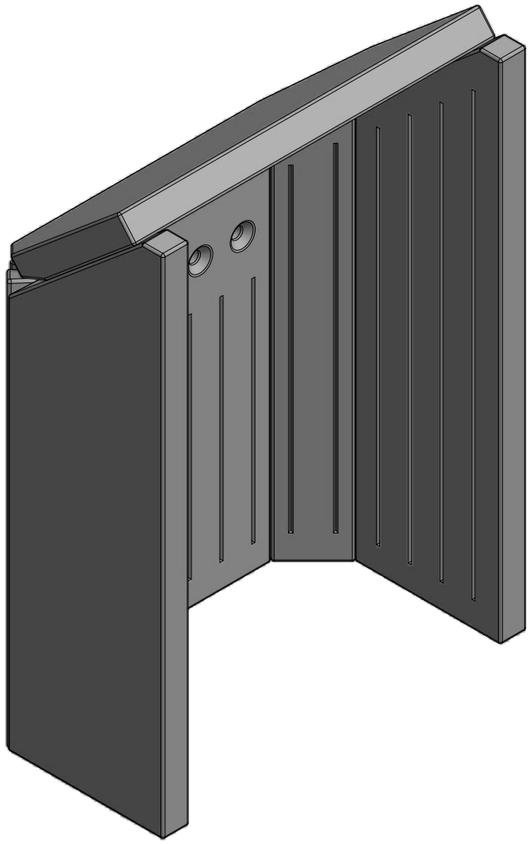

Stove Christine

Fireclay Termotec

FRAM GmbH

www.fram-gmbh.de